AD-A130 218 ANALYSIS OF THE HOWELLS-APPLEBAUM ALGORITHM IN THE PRESENCE OF MOVING INT. (U) YALE UNIV NEW HAVEN CT CENTER FOR SYSTEMS SCIENCE F B TUTEUR 22 OCT 82 8213 1/1

UNCLASSIFIED AFOSR-TR-83-0561 AFOSR-80-0077 F/G 9/1 NL

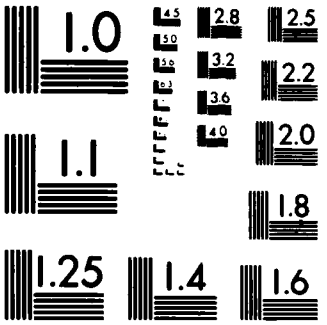

MICROCOPY RESOLUTION TEST CHART
NATIONAL BUREAU OF STANDARDS-1963-A

ADA130218

CENTER FOR SYSTEMS SCIENCE

ELECTRICAL ENGINEERING

YALE UNIVERSITY

83 07 01 105

AFOSR-TR- 83-0561

Final Technical Report

AFOSR 80-0077

Franz B. Tuteur

Principal Investigator

October 22, 1982

AIR [illegible]
[illegible]
This [illegible]
[illegible]
Dist. [illegible]
MATT[illegible]
Chief, Technical Information Division

SECURITY CLASSIFICATION OF THIS PAGE (When Data Entered)

REPORT DOCUMENTATION PAGE		READ INSTRUCTIONS BEFORE COMPLETING FORM
1. REPORT NUMBER AFOSR-TR- 82-0561	2 GOVT ACCESSION NO.	3 RECIPIENT'S CATALOG NUMBER
4. TITLE (and Subtitle) Final Technical Report on AFOSR-80-0177		5. TYPE OF REPORT & PERIOD COVERED Final Report
		6. PERFORMING ORG. REPORT NUMBER S&IS # 8213
7. AUTHOR(s) Franz B. Tuteur		8. CONTRACT OR GRANT NUMBER(s) AFOSR 80-0077
9. PERFORMING ORGANIZATION NAME AND ADDRESS Yale University, Dept. of Electrical Engineering New Haven, Connecticut 06520		10. PROGRAM ELEMENT, PROJECT, TASK AREA & WORK UNIT NUMBERS 2304/AC 61102F
11. CONTROLLING OFFICE NAME AND ADDRESS Air Force Office of Scientific Research Bld 410, Bolling AFB, D.C. 20332		12. REPORT DATE October 22, 1982
		13. NUMBER OF PAGES 11
14. MONITORING AGENCY NAME & ADDRESS (if different from Controlling Office)		15. SECURITY CLASS. (of this report) Unclassified
		15a. DECLASSIFICATION/DOWNGRADING SCHEDULE

16. DISTRIBUTION STATEMENT (of this Report)

Approved for public release; distribution unlimited.

17. DISTRIBUTION STATEMENT (of the abstract entered in Block 20, if different from Report)

Distribution is Unlimited

18. SUPPLEMENTARY NOTES

19. KEY WORDS (Continue on reverse side if necessary and identify by block number)

20. ABSTRACT (Continue on reverse side if necessary and identify by block number)

Four ongoing projects are briefly described. They are:

1. Analysis of the Howells-Applebaum algorithm in the presence of moving interference.
2. The use of lattice filters in adaptive array processors.
3. Stability analysis of LMS adaptive filters.

DD FORM 1 JAN 73 1473 EDITION OF 1 NOV 65 IS OBSOLETE

SECURITY CLASSIFICATION OF THIS PAGE (When Data Entered)

4. Adaptive array processors with moving interference treated from the frequency-domain point of view. Conclusions are 1) the Howells-Applebaum algorithm is so insensitive to interference motion that it is unnecessary to consider such motion in the design; and 2) adaptive array processors based on the frequency-domain approach have a worse performance than those based on time-domain approaches mainly because of the time lag required in the operation of the Fourier transform operation.

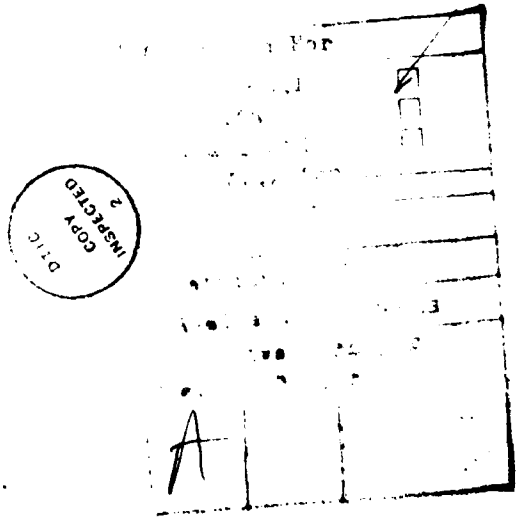

1. Introduction

An interim scientific report describing the research activities supported by the project was submitted in July 1982. A copy of this report is attached as an appendix to this final report. Since the interim report was submitted only a little over three months ago not much additional progress can be reported at this time. Unfortunately, both of the graduate students whose work was reported as being in progress last July have left the project. Therefore the work on Narrow-Band Adaptive Array Processors (Section 2 of Appendix A) and on the Frequence-Domain Implementation (Section 5 of Appendix A) remains incomplete. The only item on which some progress has been made has been an analysis of the performance degradation of adaptive signal processors subject to randomly varying changes in the noise field. We include a brief summary of this work here. A paper containing the results of this phase of the investigation is in preparation. [3]

2. Adaptive Array Processors in a Randomly Varying Noise Field

The array processor considered in the analysis is described in Ref. [2]. It consists of M transversal filters having n weights each. Each of the M filters takes as its input the signal from one of the M sensors in the array. The outputs of all of the filters are added to produce the final filter output, which can be used to either estimate target parameters or to detect presence or absence of a target in a specified direction. In applications to detection, the processor is assumed to have information about target direction and spatial spectrum; however it has no information about the noise to which it is supposed to adapt. In practice, this adaptation results in the formation of nulls in

the direction of concentrated noise sources.

The analysis is based on the following assumption:

1) The received signal is a white-noise process; hence signals obtained from adjacent elements of the delay lines used in the transversal filters are independent.

2) The changing noise environment results in a change of the optimum filter weights. These weights are assumed to be sample functions from an independent-increment random process. Also, the variation in the optimum weight are assumed to be slow compared to the adaptation time of the processor; this permits a quasistationary analysis of performance to be used.

Given these assumptions the approximate results presented in our report # 8113 [2] can be shown to be rigorously correct.

3. Papers, Reports, Work in Progress

1. F.B. Tuteur and B. Heilweil "Adaptive Array Processor for Wide-Band Signals" Proceedings of the Workshop on Application of Adaptive Systems Theory, Yale University, May 1981, pp. 78-84.

2. F.B. Tuteur, B. Heilweil, and J. McMahon "Adaptive Array Processor with Time-Varying Noise Patterns", S&IS report No. 8113, Department of Engineering and Applied Science, Yale University, New Haven, Ct., September 1981.

3. F.B. Tuteur "Tracking Behavior of an Adaptive Array Processor in a Randomly Varying Noise Field". (in preparation)

4. F.B. Tuteur and J. McMahon "Frequency Analysis of an Adaptive Array Processor with Varying Noise Field". (in preparation)

Interim Scientific Report

AFOSR 80-0077

Franz B. Tuteur,

Principal Investigator

1. Introduction

The last technical report on research supported by the project was Technical Report No. S&IS No. 8113 [1]. This report was submitted in September of 1981. In the meantime four separate investigations have been conducted as follows:

1. The effect of moving interference sources in narrow-band adaptive array processors as used in radar.
2. Investigation of the properties of adaptive lattice filters with a view toward eventual use in adaptive processors.
3. Elimination of certain approximations in previous analyses
4. Frequency-Domain Implementation of the Adaptive Filter

A brief description of these four tasks is presented below. Further details will be contained in our final report, and in several publications that are planned.

2. Narrow-Band Adaptive Array Processors

Task No. 1 was an investigation of the operation of the Howells-Applebaum adaptive algorithm [2] when the interference was moving. A preliminary conclusion of this investigation was that the algorithm as normally implemented is quite insensitive to movement of the interference source, and that noticable performance degradation would require an interference source

moving past the receiver at speeds in excess of March 1 and at distances of a few feet. It appears, therefore that interference motion need not be considered in the design of this type of adaptive loop. We hope to include a complete analysis of this problem in our final report.

3. Lattice Structures

Lattice adaptive filters have recently received much attention in applications such as channel equalization [3] and speech processing [4,5]. The lattice structure arises naturally in the theory of prediction-error filters [6]. Adaptive lattice structures have been proposed by Satorius and Alexander [3], Griffiths [7] and Hotchkiss [8]. Their advantage over the conventional transversal-filter structures of Widrow [10] are more rapid convergence, especially in applications such as frequency tracking where there may be a large spread in eigenvalues of the signal covariance matrix. This superiority has been demonstrated for particular cases by computer simulations in [3,8]. There would clearly be little reason to consider optimal forms of transversal filters if lattice filters are uniformly superior.

The update equations for lattice filters are considerably more complicated than those for transversal filters and only very approximate and preliminary analyses of their behavior are therefore available. One such analysis has recently been published by Honig and Messerschmitt [9]. It assumes independence of the various stages of the lattice filter and makes other simplifying assumptions that are not obviously justified. However, one conclusion of this work is that the convergence speed of lattice structures is not necessarily greater than that of transversal structures. Thus the issue of the superiority of lattice structures appears to be less clear cut then some of the optimistic statements of earlier authors would lead one to

believe. In any case no analysis of lattice filter behavior under time-varying input conditions appears to have been attempted, and further work on this problem is indicated.

4. Improvement of certain derivations

The main result obtained in [1], Eq. (53), is based on a number of simplifying assumptions that were not well justified. Specifically, Eq. (42) is obtained on the basis of the unproven assumption that cross-product terms are negligible. Also it is stated that covariance terms such as $\overline{X_i V_i^T}$ or $\overline{X_i e}$ are zero.

It has been shown that these equations are all exact if one makes the single assumption of a white input spectrum. More precisely, what is needed is independence of signals in adjacent channels of the delay-line filter (ie. the elements of the vector $\underline{X}$). In practice this is a somewhat restrictive assumption since one may wish to consider colored inputs. However, it is an assumption that has been used in [10]. Also, computer simulations indicate that the behavior of the LMS adaptive loop is not significantly altered if the elements of $\underline{X}$ are correlated. In any case, if this assumption is made it is easily shown that past values of the weight vector are independent from current and future values of the input-signal vector. From this the vanishing of cross-product terms in Eq. (42) of [1] is easily demonstrated. A further consequence of the more accurate analysis is that the condition $\mu \mathrm{tr}\underline{R} < 1$ may not be sufficient to insure stability of the filter, but that $\mu \mathrm{tr}\underline{R} < 1/3$ is definitely sufficient.

5. Frequency Domain Implementation

The frequency-domain approach to the basic LMS adaptive algorithm was first suggested by Dentino, McCool and Widrow [11] and an analysis of this approach

was performed by Bershad and Feintuch [12]. In a more recent paper by Reed and Feintuch [13] the time-domain and frequency-domain approaches are compared. In general the advantage of the frequency-domain approach is that it can be taylored to input signals that have narrow-band components. As far as our specific problem is concerned, it was hoped that the frequency-domain approach might be more satisfactory in dealing with the time-varying input covariance matrix that results when interference motion is considered.

5.1. The Frequency-domain Adaptive Array Processor

The block diagram of the frequency-domain adaptive array processor is shown in figure 1. As in the time-domain filter, we have that each of the M hydrophones is connected to an (n+1)-element tapped delay-line. Let the vector of signals in the ℓth delay-line at discrete time i be denoted by:

$$\underline{x}_{i\ell} = (x_{i\ell 0}\ x_{i\ell 1}\ \cdots\ x_{i\ell n})^T\ ,\ \ell=1,2,\ldots,M. \qquad (1)$$

Each of these M vectors is used as the input to a Discrete Fourier Transform (DFT), which can be represented by the transformation:

$$\underline{x}_{i\ell} \xrightarrow{DFT} \underline{X}_{hi\ell}\ ,\ \text{where} \qquad (2)$$

$$\underline{X}_{hi\ell} = (X_{i\ell 0}\ X_{i\ell 1}\ \cdots\ X_{i\ell n})^T\ ,\ \ell=1,2,\ldots,M. \qquad (3)$$

The subscript h is used in 2) and 3) because this vector refers to DFT elements at a specific hydrophone; the vector defined in (3) will not be used in any subsequent analysis. The elements $X_{i\ell k}$ in the frequency-domain processor are put into vectors corresponding to each discrete frequency. We therefore define the vect[illegible]

$$\underline{X}_{im} = (X_{i1m}\ X_{i2m}\ \cdots\ X_{iMm})^T\ ,\ m=0,1,\ldots,n. \qquad (4)$$

The complex weight vectors are given by:

$$\underline{W}_{im} = (W_{i1m}\ W_{i2m}\ \cdots\ W_{iMm})^T\ ,\ m=0,1,\ldots,n. \qquad (5)$$

The frequency-domain adaptive array processor forms an estimate of the n target signals which are contained in the delay-line of the hydrophone that is physically in the middle of the linear array (the delay-line also contains the noise, of course). Let us assume that M is odd. Then the processor forms an estimate of the target signal component of the vector $\underline{X}_{i(M+1/2)}$. This is done by performing an inverse DFT on the sequence

$$Z_{im} = \underline{W}_{im}^{T} \underline{X}_{im} \quad , \quad m=0,1, \ldots,n. \tag{6}$$

The vector of values which result from this final inverse DFT,

$$\underline{z}_i = (z_{i0}\ z_{i1} \cdots z_{in})^T \tag{7}$$

are the estimates of the target signals.

It should be noted here that all the complex vectors defined so far would, in actual implementation, be represented by two vectors, one containing the real part of each element, and one containing the imaginary part. The frequency domain weight-update equation is given by:

$$\underline{W}_{(i+1)m} = \underline{W}_{im} + 2\mu(\underline{P}_{im} - \underline{U}_{im}) \quad , \quad m=0,1,\ldots,n. \tag{8}$$

In equation (8), the vector $\underline{P}_{im}$ is equal to the spectral value of the target signal at the discrete frequency m multiplied by a vector of phase shifts based upon the known bearing of the target. Assuming again that M is odd, $\underline{P}_{im}$ is given by

$$\underline{P}_{im} = S(w_m)\ (\ \exp(j(M-1)\Delta_{im}/2)\ \ \exp(j(M-3)\Delta_{im}/2) \ \ldots$$

$$\ldots\ \exp(-j(M-1)\Delta_{im}/2)\ )^T \quad , \quad m=0,1,\ldots,n. \tag{9}$$

where $S(w_m)$ is the spectral value of the target signal at frequency m/T_s, and

$$\Delta_{im} = 2\pi(dm\cos\theta_1/c(n+1)T_s) \quad . \tag{10}$$

Henceforth it will be assumed that the target is stationary, so the

index i will be dropped from equations (9) and (10) and from $\underline{P}$ in equation (8).

The vector $\underline{U}_{im}$ is given by:

$$\underline{U}_{im} = (1/n+1)\, Z_{im} \underline{X}_{im} , \quad m=0,1,\ldots,n. \tag{11}$$

where the division by (n+1) appears because the elements of $\underline{U}_{im}$ are compared in the weight update equation to a power spectrum value.

5.2. Analysis of Performance Degradation

Based on analysis which will be presented in a forthcoming report, the performance degradation of the frequency-domain adaptive array processor expressed as a fraction of the mean-square output is given by:

$$\frac{\Delta J}{J} = \frac{\sum_{m=o}^{n} \frac{\frac{\mu}{(n+1)} \mathrm{tr}[\underline{P}_m \underline{P}_m^{+} + \underline{R}_m^{*} \underline{P}_m \underline{T}_{\underline{R}_m}^{-1} \underline{P}_m^{*}] + \frac{(n+1)T_s^2}{4\mu} \underline{P}_m^{T} (\underline{R}_m^{-1} \dot{\underline{R}}_m \underline{R}_m^{-1})^2 \underline{P}_m^{*}}{1 - \frac{\mu}{(n+1)} \mathrm{tr}[\underline{R}_m^{*}]}}{\sum_{m=o}^{n} \underline{P}_m^{T} \underline{R}_m^{-1} \underline{P}_m^{*}} \tag{12}$$

where $\underline{R}_m$ is defined as

$$\underline{R}_m = E(\underline{X}_m \underline{X}_m^{+}) \quad , \quad m=0,1,\ldots,n \quad , \tag{13}$$

the dot (.) over $\underline{R}_m$ in the last term in the numerator means time derivative, and T_s equals the sampling period. Plots of Eg (12) have been made for various ratios of interference to isotropic noise power ($\alpha/1-\alpha$) and number of array elements (M). Signal, interference, and ambient noise spectra were assumed

flat out to a maximum frequency f_m; ie

$$\text{Target spectral density } S(f) = \begin{cases} S_o/2 & |f| < f_m \\ 0 & |f| > f_m \end{cases}$$

$$\text{Interference spectral density } N(f) = \begin{cases} N_o/2 & |f| < f_m \\ 0 & |f| > f_m \end{cases}$$

$$\text{Ambient noise spectral density} = N/2 \qquad |f| < f_m, \quad |f| > f_m$$

The value of the loop gain μ was chosen to equate the two numerator terms in (12), since this is the optimum adjustment. Under these conditions it was found that the relative performance degradation, plotted as a function of the quantity $n T_s \dot{\phi}/\gamma_o$, where γ_o is the effective beam width, was essentially the same as in Fig. 4 of [1]; ie. the results for the frequency-response approach were the same as those for the time-domain approach. In view of the fact that similar assumptions concerning spectral densities of the input signal, etc. were used in the two plots, this correspondence is perhaps not surprising; in fact it serves mainly to demonstrate that the two approaches yield the same results.

In practice the weight-vector update for frequency-domain adaptive filters cannot take place at every sample instant. An update requires completion of a DFT operation which cannot occur until n time samples of the signal to be transformed have been collected in a buffer. This extra delay tends to degrade the performance of the frequency-domain filter relative to that of the time domain filter. It is easily shown that the additional performance degradation for a constant velocity interference is proportional to $\sqrt{n}$ where n is the number of time samples needed to fill the DFT buffer.

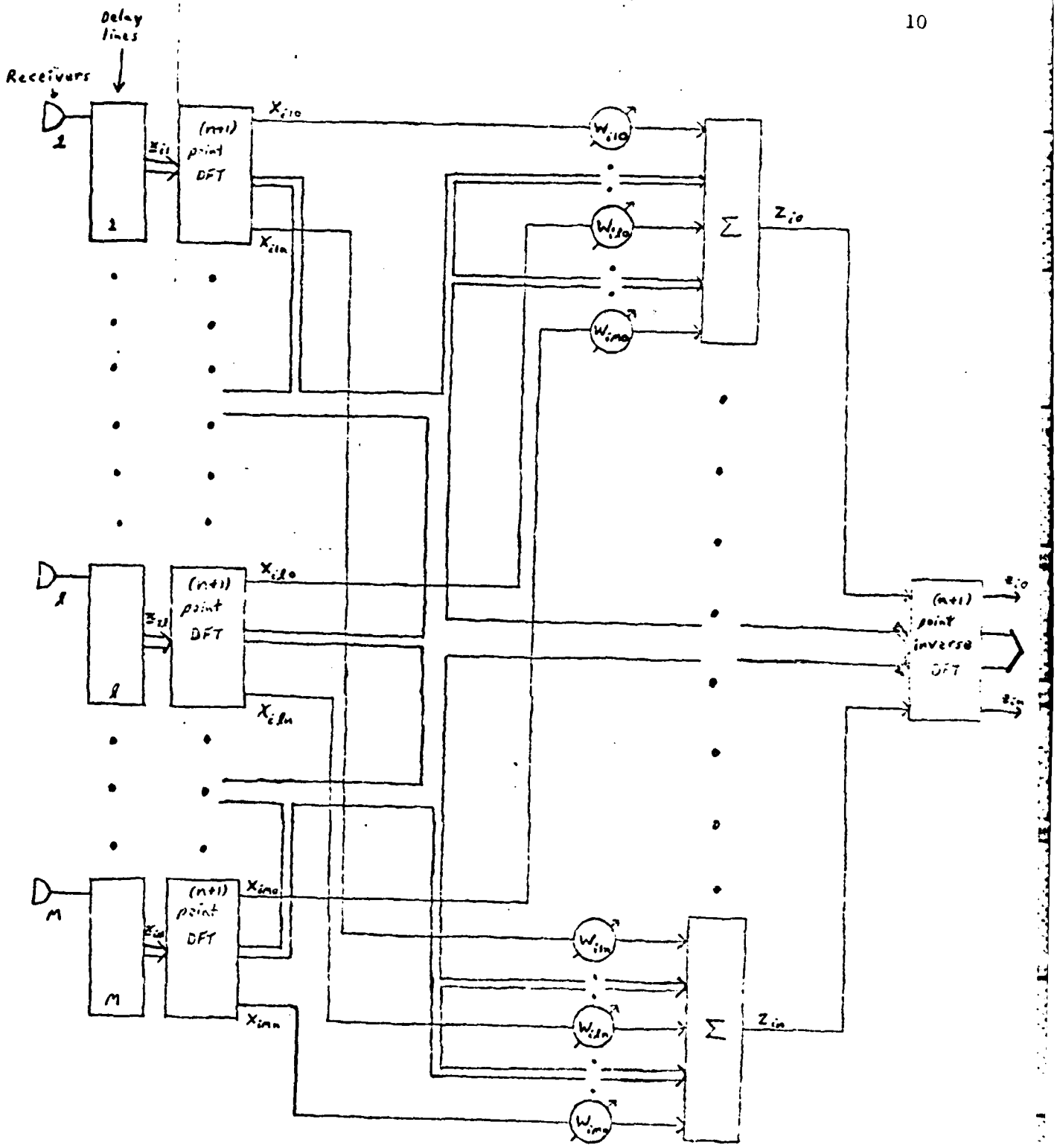

Block Diagram of the Frequency Domain Adaptive Array Processor

References

[1] B. Heilweil, J. McMahon, and F. B. Tuteur. Adaptive Array Processors with Time-Varying Noise Patterns, S&IS Report No. 8113, Department of Engineering and Applied Science, Yale University, New Haven, CT., Sept. 1981.

[2] R. A. Monzingo & T. W. Miller. Introduction to Adaptive Arrays, Wiley-Interscience 1980, Chapter 5.

[3] E. H. Satorius and S. T. Alexander, "Channel equalization using adaptive lattice algorithms," IEEE Trans. Vol. COM-27, pp. 899-905, June 1979.

[4] A. H. Gray and J. D. Markel. Linear Prediction of Speech, Springer Verlag, 1976.

[5] L. R. Rabiner and R. W. Schafer. Digital Processing of Speech Signals, Prentice Hall, 1978.

[6] S. Haykin & S. Kessler, "Prediction-error filtering and maximum-entropy spectral estimation". Topics in Applied Physics, vol. 34, S. Haykin, ed., Springer 1979.

[7] L. J. Griffiths, "A Continuous Adaptive Filter Implemented as a Lattice Structure", Proc. IEEE Int. Conf. Acoust, Speech, Signal Processing, (Hartford, CT.) pp. 683-686, May 13-19, 1977.

[8] W. S. Hotchkiss, Jr. and J. A. Presley, Jr. "Adaptive tracking of multiple sinusoids where power levels are widely separated" IEEE Trans. Vol. ASSP-29 No. 3, June 1981, pp. 710-721.

[9] M. L. Honig and D. G. Messerschmitt, "Convergence properties of an adaptive digital lattice filter", Trans IEFE vol. ASSP-29, No. 3, June 1981, pp. 642-653.

[10] B. Widrow et. al., "Adaptive noise cancelling: Principles and Applications" Proc. IEEE Vol. 63, pp. 1692-1716, Dec 1975, Appendix D, Section B.

[11] M. Dentino, J. McCool, and B. Widrow, "Adaptive filtering in the frequency domain", Proc. IEEE, vol. 66, pp. 1658-1659, Dec. 1978.

[12] N. J. Bershad and P. L. Feintuch, "Analysis of the frequency-domain adaptive filter", Proc. IEEE, Vol. 67, pp. 1658-1659, Dec. 1979.

[13] Francis A. Reed and Paul L. Feintuch, "A Comparison of LMS Adaptive Cancellers Implemented in the Frequency Domain and the Time Domain", IEEE Trans, Vol. ASSP-29, No. 3, June 1981, pp. 770-775.

END

FILMED

8-83

DTIC